Peripherals

File: peripherals.kicad_sch

SAMD51 Assignments

File: SAMD51_pinout.kicad_sch

TODO:
1. DETERMINE PHOTODIODE RESISTANCE
2. SIMPLIFY POWER SWITCHING (REQUIRES DETERMINING 5V AND 1.8V INPUTS?)
3. ADD SBAND

| | | |
|---|---|---|
| Sheet: / | | |
| File: PVDX Compute Board.kicad_sch | | |
| **Title:** PVDX COMPUTE BOARD | | Milan Capoor |
| Size: A4 | Date: | **Rev:** 1 |
| KiCad E.D.A. 9.0.3 | | Id: 1/3 |

# PVDX FLATSAT COMPUTE BOARD

## MRAM

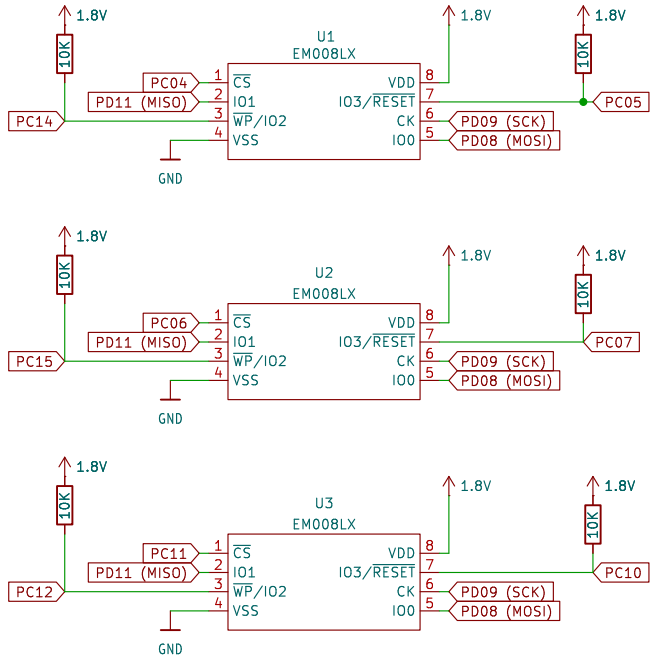


## USB CONNECTION AND REGULATORS

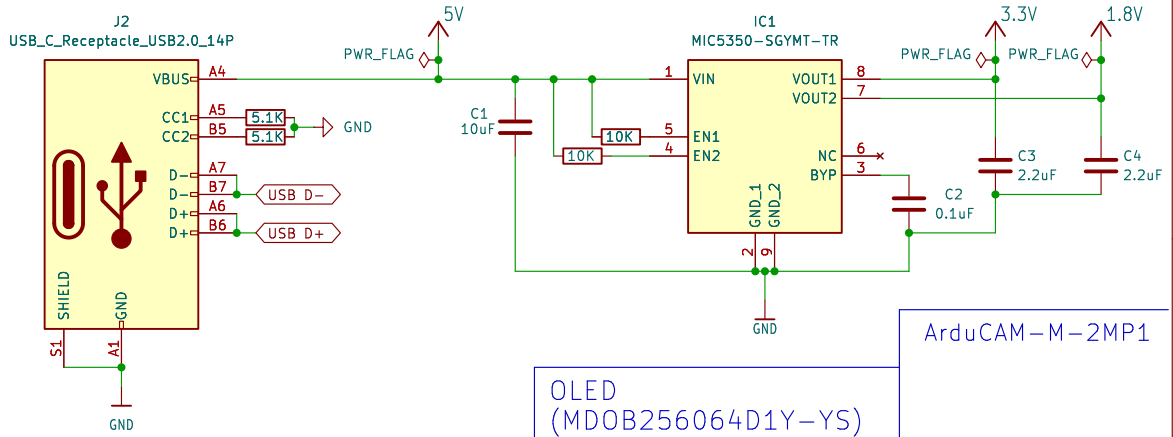


## MOUNTING HOLES

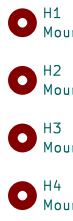


## MAGNETOMETER (RM3100)

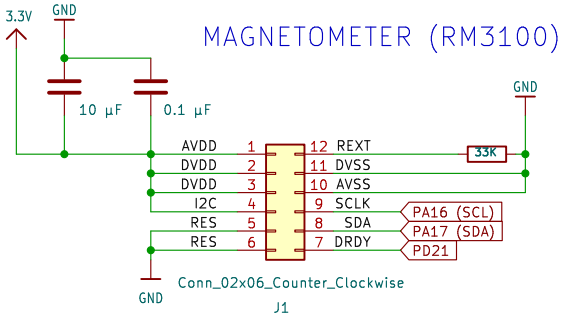


## POWER LED

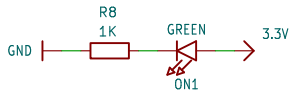


## OLED (MDOB256064D1Y−YS)

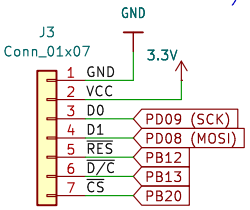


## ArduCAM−M−2MP1

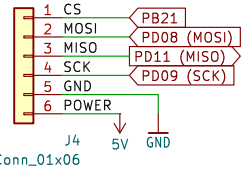


## SWD INTERFACE

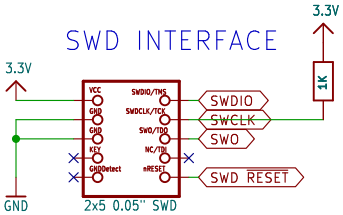


## GLOBAL GROUND FLAG (FOR ERC)

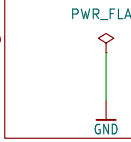


Sheet: /Peripherals/
File: peripherals.kicad_sch

**Title:** PVDX COMPUTE BOARD

Milan Capoor

| Size: A4 | Date: | Rev: 1 |
|---|---|---|
| KiCad E.D.A. 9.0.3 | | Id: 2/3 |

# PINS

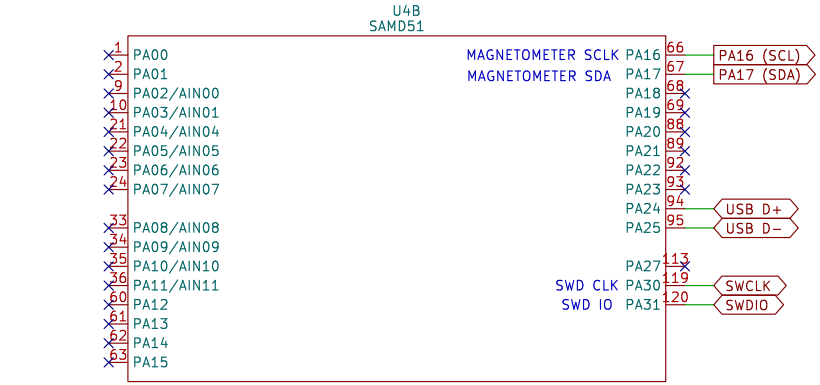


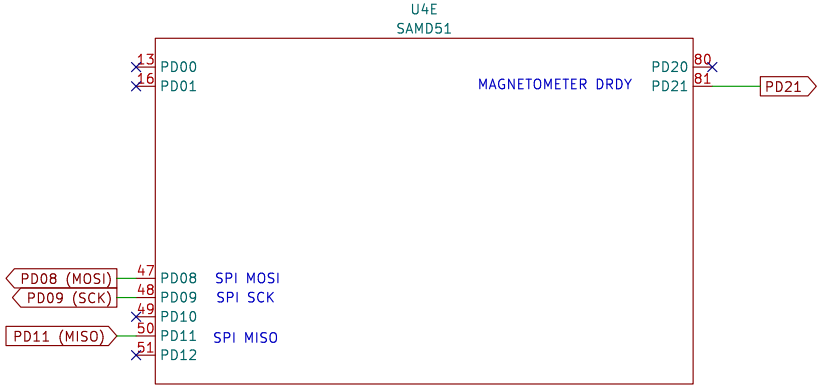


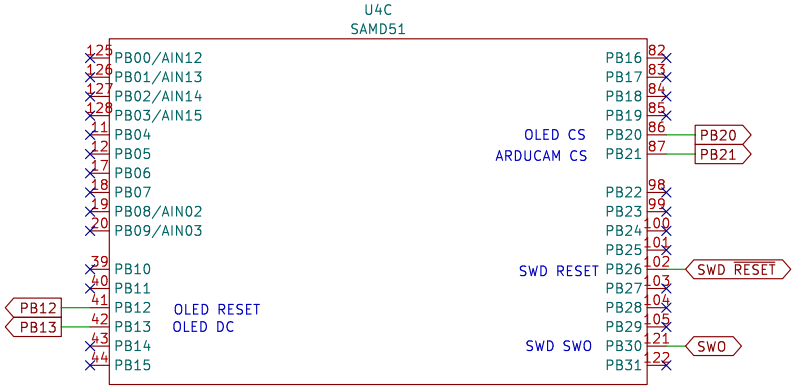


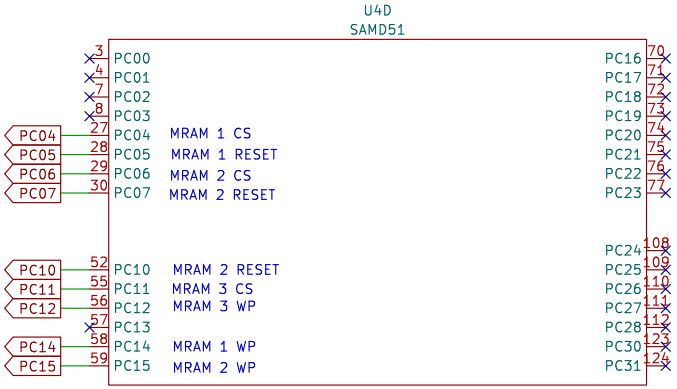


# POWER

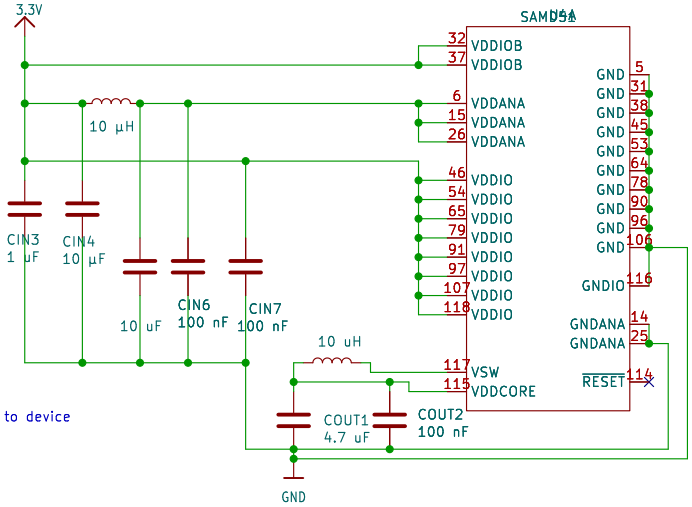


Power Circuit – Place capacitors close to device

Sheet: /SAMD51 Assignments/
File: SAMD51_pinout.kicad_sch

**Title:** PVDX COMPUTE BOARD – SAMD51

Milan Capoor

| Size: A4 | Date: | Rev: |
|---|---|---|
| KiCad E.D.A. 9.0.3 | | Id: 3/3 |